| FROG LEGS SUSPENSION FORKS | COLOURS IN MOTION | Ver. 8 | 01/01/23 |
|---|---|---|---|
| | | Section | 1800 |

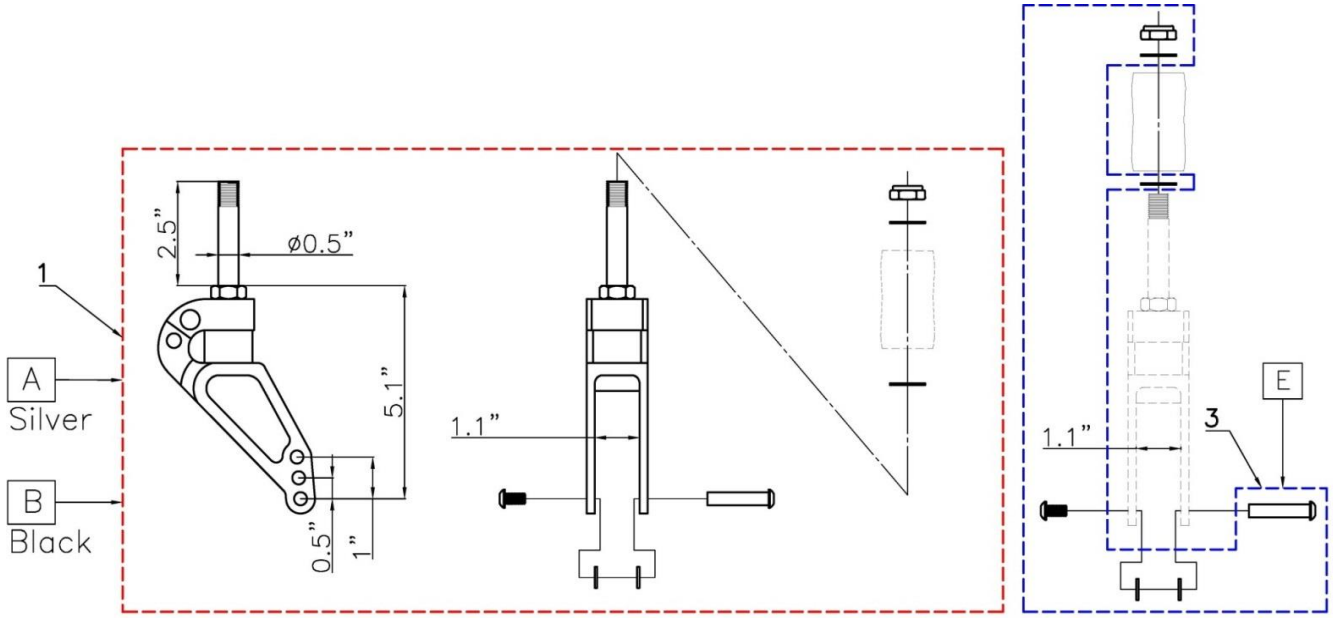


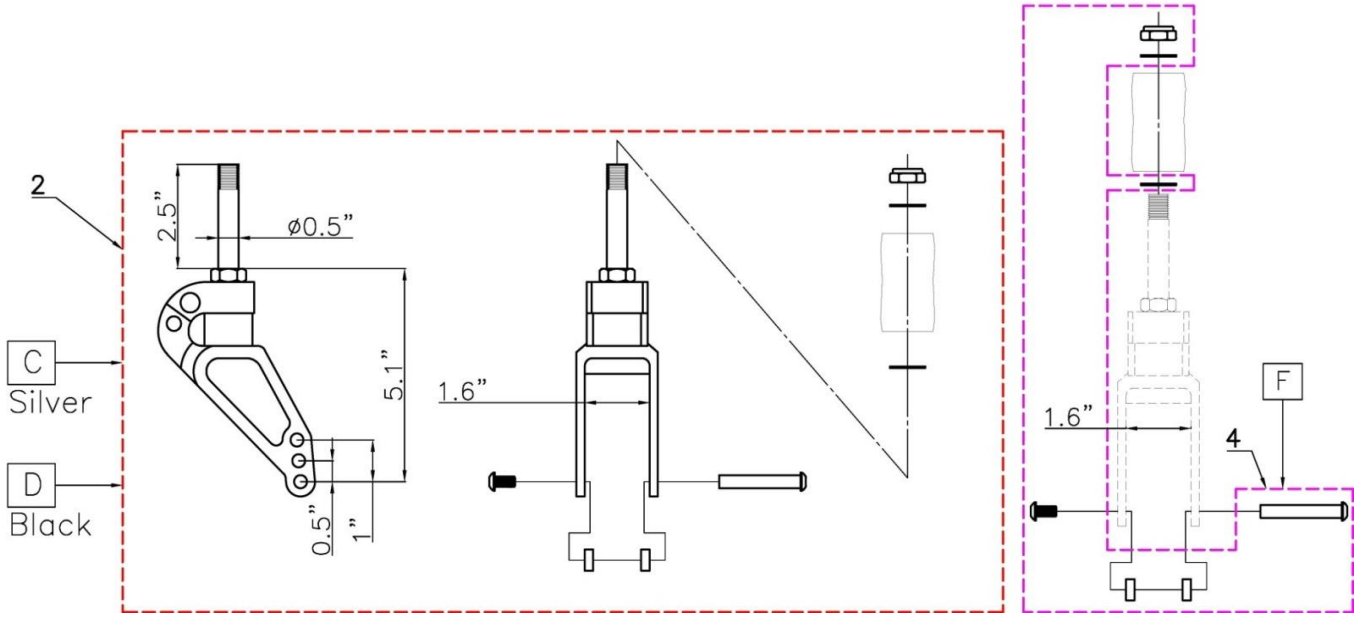


| POS | Assy # | # | Parts # | QTY | Color | Remark | MSRP | NOTE |
|---|---|---|---|---|---|---|---|---|
| A | - | 1 | 0410-300 | 1pair | Blk | Black Anodized | per 1pair | 1pair/chair |
| B | - | 1 | 0410-301 | 1pair | Sil | Silver Anodized | per 1pair | 1pair/chair |
| C | - | 2 | 0410-315 | 1pair | Blk | Black Anodized Wide Fork | per 1pair | 1pair/chair |
| D | - | 2 | 0410-317 | 1pair | Sil | Silver Anodized Wide Fork | per 1pair | 1pair/chair |
| E | - | 3 | 0410-100 | 1 | Blk | Hardware sets for STD Forks | per 1set | 2set/chair |
| F | - | 4 | 0410-150 | 1 | Blk | Hardware sets for Wide Forks | per 1set | 2set/chair |
| | | | | | | | | |

| POS | Assy # | # | Parts # | QTY | Color | Remark | MSRP | Note |
|---|---|---|---|---|---|---|---|---|
| | | | | | | | | |